# SPARE PARTS LIST
# ERSATZTEILLISTE
# LISTE PIECES DETACHEES

**E**

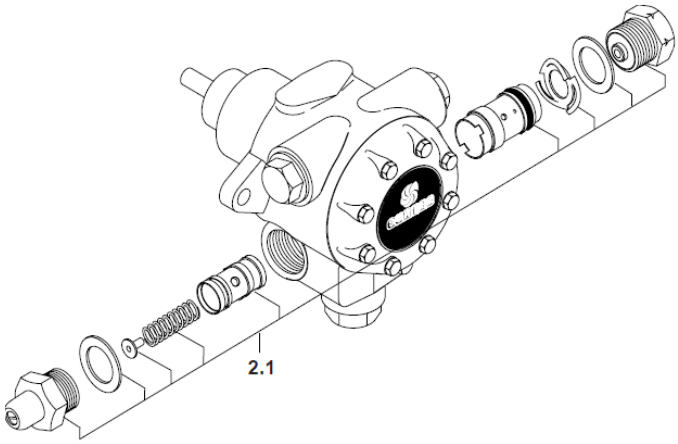


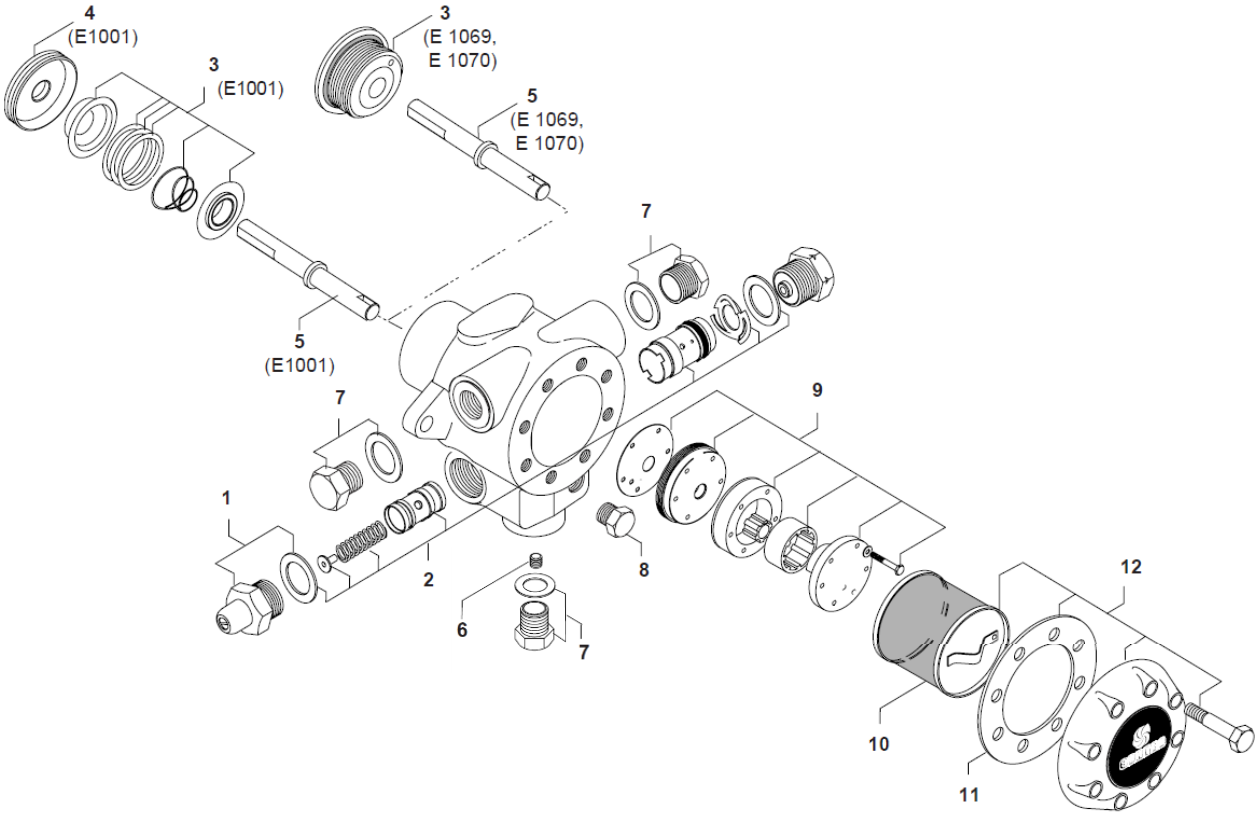


SUNTEC INDUSTRIES France – 1, rue Lavoisier – CS 60102 – 21 603 LONGVIC Cédex
Tel +33 (0)3 80 70 60 70 – information@suntec.fr – www.suntec.fr

# SPARE PARTS LIST
# ERSATZTEILLISTE
# LISTE PIECES DETACHEES

**E**

| Pos. | Description | Reference | Pos. | Description | Reference |
|---|---|---|---|---|---|
| 1 | Pressure adjusting plug assy | 993003 | | | |
| 2 | Pressure regulator kit 14 - 30 bars | 991412 | | | |
| 2.1 | Low pressure regulator kit 1,4 - 2,8 bars (no cut-off) | 993004 | 6 | By-pass plug | 24800 |
| | Low pressure regulator kit 2,8 - 5,6 bars (no cut-off) | 993005 | 7 | G 1/2 plug and washer | 993001 |
| 3 | E 1001 Shaft seal kit | 993473 | 8 | G 1/8 steel plug (without washer) | 3779835 |
| | E 1069/1070 Shaft seal kit | 132632 | 9 | Gear kit | not available |
| 4 | E 1001 Seal cap | 100031 | 10 | "C" type filter | 134423 |
| 5 | Shaft | | | "N" type filter | 134433 |
| | | | 11 | Cover gasket | 135803 |
| | | | 12 | E1001 "Cover + filter + cover gasket" kit | 991470 |

| | | E4 | E6 | E7 |
|---|---|---|---|---|
| 1001 | rev.5 | 136009 | 133647 | 133647 |
| 1001 | rev.6 | 136009 | 136012 | |
| 1069/1070 | rev.5 | 136010 | 993010 | 993010 |
| 1069/1070 | rev.6 | 136010 | 136013 | |
| 1069/1070 | rev.7 | 136010 | 136013 | 993010 |

| Pos. | Bechreibung | Teilnummer | Pos. | Bechreibung | Teilnummer |
|---|---|---|---|---|---|
| 1 | Druckeinstellungschraubensatz | 993003 | | | |
| 2 | Druckregelsatz 14 - 30 bar | 991412 | | | |
| 2.1 | Niederdruckregelsatz 1,4 - 2,8 bar (ohne Abschnitt) | 993004 | 6 | Umleitstopfen | 24800 |
| | Niederdruckregelsatz 2,8 - 5,6 bar (ohne Abschnitt) | 993005 | 7 | G 1/2 Stahlstopfen + Dichtung | 993001 |
| 3 | E 1001 Wellendichtungsatz | 993473 | 8 | G 1/8 Stahlstopfen (ohne Scheibe) | 3779835 |
| | E 1069/1070 Wellendichtungsatz | 132632 | 9 | Getriebesatz | Nicht erhältlich |
| 4 | E 1001 Wellenabschluß | 100031 | 10 | Sieb typ "C" | 134423 |
| 5 | Welle | | | Sieb typ "N" | 134433 |
| | | | 11 | Deckeldichtung | 135803 |
| | | | 12 | E 1001 "Deckel + Sieb + Deckeldichtung" Satz | 991470 |

| | | E4 | E6 | E7 |
|---|---|---|---|---|
| 1001 | Rev.5 | 136009 | 133647 | 133647 |
| 1001 | Rev.6 | 136009 | 136012 | |
| 1069/1070 | Rev.5 | 136010 | 993010 | 993010 |
| 1069/1070 | Rev.6 | 136010 | 136013 | |
| 1069/1070 | Rev.7 | 136010 | 136013 | 993010 |

| Pos. | Désignation | Reference | Pos. | Désignation | Reference |
|---|---|---|---|---|---|
| 1 | Ens. bouchon de réglage pression | 993003 | | | |
| 2 | Kit régulateur 14 - 30 bars | 991412 | | | |
| 2.1 | Kit basse pression 1,4 - 2,8 bars (sans coupure) | 993004 | 6 | Bouchon by-pass | 24800 |
| | Kit basse pression 2,8 - 5,6 bars (sans coupure) | 993005 | 7 | Bouchon G 1/2 et rondelle | 993001 |
| 3 | Ensemble joint E 1001 | 993473 | 8 | Bouchon acier G 1/8 , sans rondelle | 3779835 |
| | Ensemble joint E 1069/1070 | 132632 | 9 | Kit engrenage | Non disponible |
| 4 | Couvercle de joint E 1001 | 100031 | 10 | Filtre type "C" | 134423 |
| 5 | Arbre | | | Filtre type "N" | 134433 |
| | | | 11 | Joint de couvercle | 135803 |
| | | | 12 | Ens. "couvercle + filtre + joint de couv." E 1001 | 991470 |

| | | E4 | E6 | E7 |
|---|---|---|---|---|
| 1001 | rév.5 | 136009 | 133647 | 133647 |
| 1001 | rév.6 | 136009 | 136012 | |
| 1069/1070 | rév.5 | 136010 | 993010 | 993010 |
| 1069/1070 | rév.6 | 136010 | 136013 | |
| 1069/1070 | rév.7 | 136010 | 136013 | 993010 |

SUNTEC INDUSTRIES France – 1, rue Lavoisier – CS 60102 – 21 603 LONGVIC Cédex
Tel +33 (0)3 80 70 60 70 – information@suntec.fr – www.suntec.fr