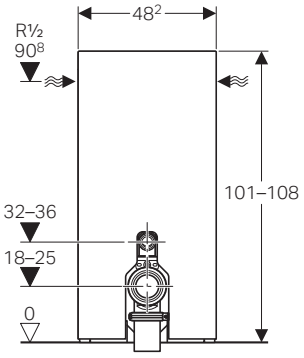
48²
R½
90⁸
101–108
32–36
18–25
0