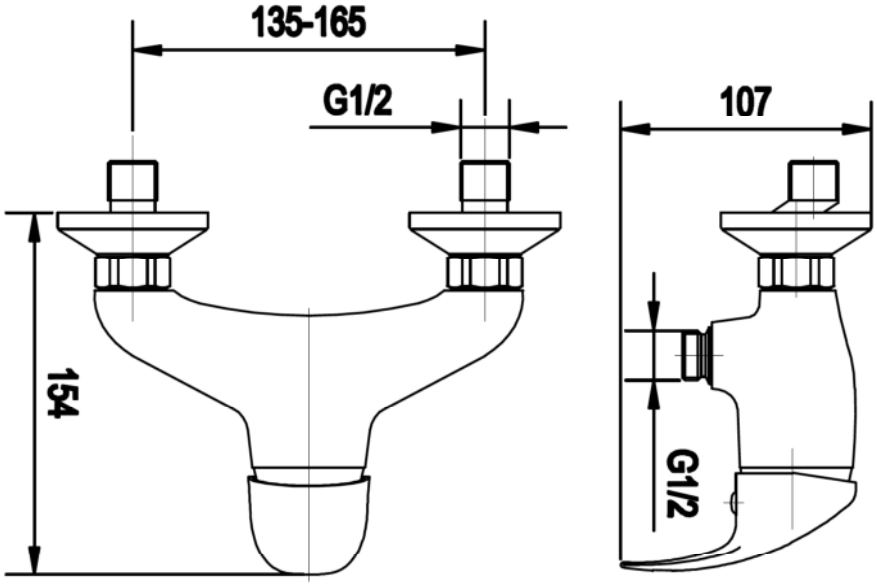
135-165
G1/2
107
154
G1/2