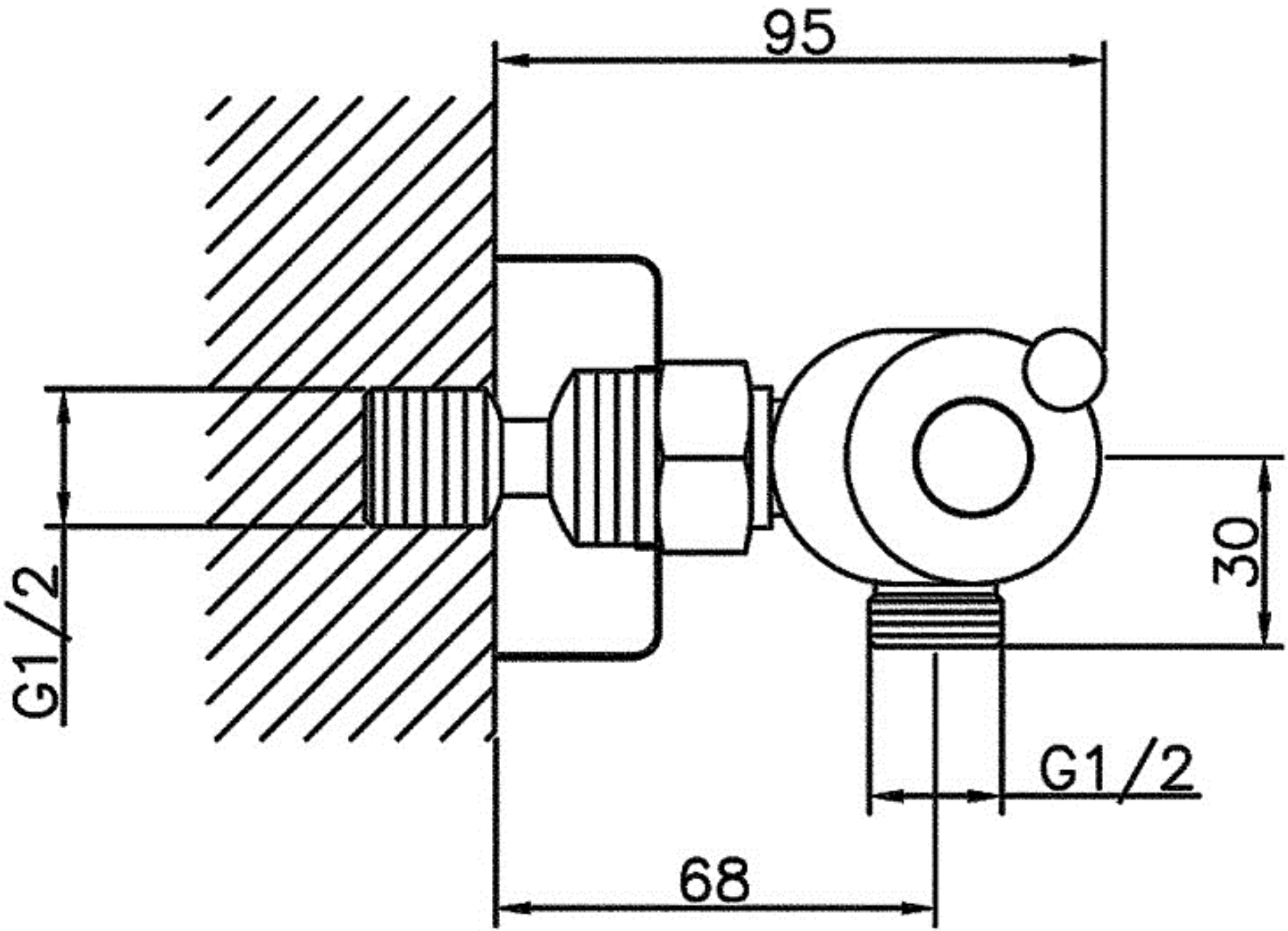
95
30
G1/2
G1/2
68