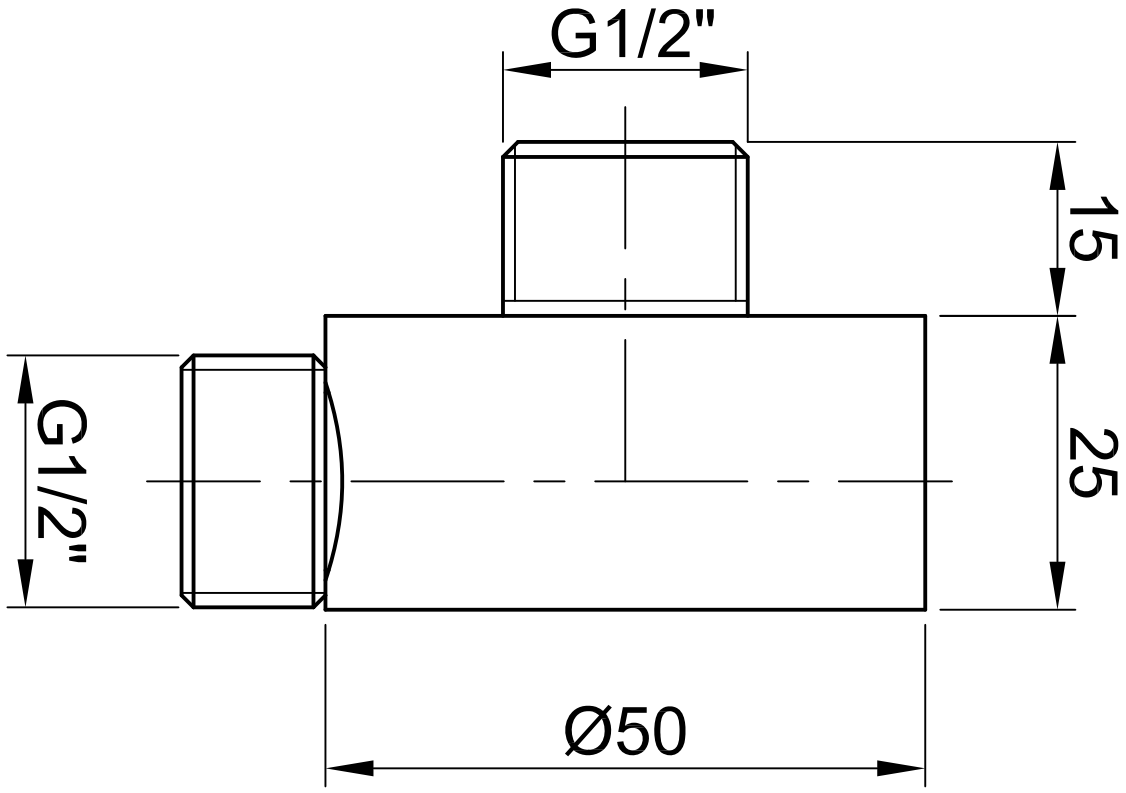
G1/2"
15
25
G1/2"
Ø50